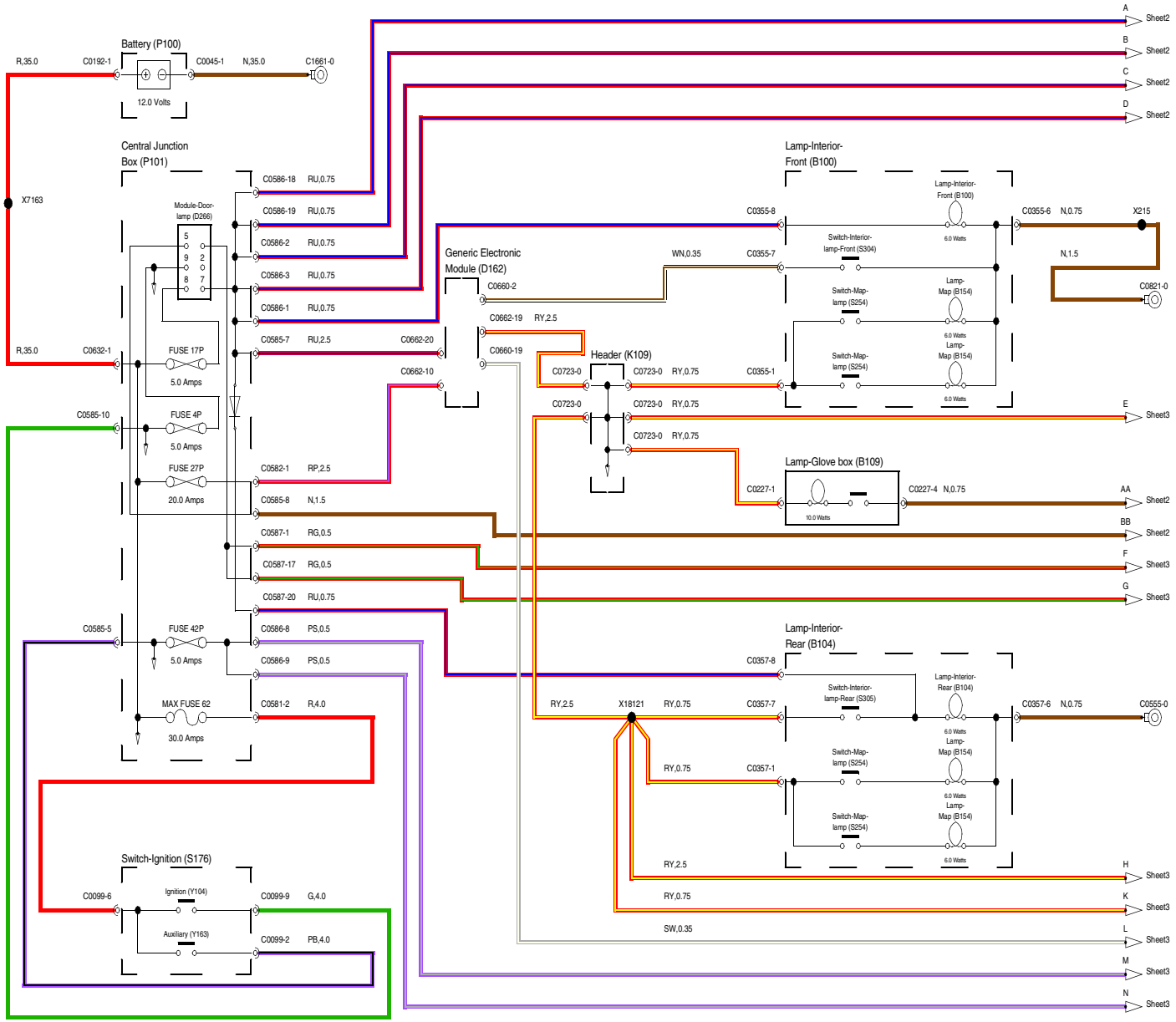
Battery (P100)
R,35.0
C0192-1
C0045-1
N,35.0
C1661-0
12.0 Volts
Central Junction Box (P101)
X7163
Module-Door-lamp (D266)
C0586-18 RU,0.75
C0586-19 RU,0.75
C0586-2 RU,0.75
C0586-3 RU,0.75
C0586-1 RU,0.75
C0585-7 RU,2.5
C0662-20
C0662-10
R,35.0
C0632-1
FUSE 17P
5.0 Amps
C0585-10
FUSE 4P
5.0 Amps
FUSE 27P
20.0 Amps
C0582-1 RP,2.5
C0585-8 N,1.5
C0587-1 RG,0.5
C0587-17 RG,0.5
C0587-20 RU,0.75
C0585-5
FUSE 42P
5.0 Amps
C0586-8 PS,0.5
C0586-9 PS,0.5
MAX FUSE 62
30.0 Amps
C0581-2 R,4.0
Switch-Ignition (S176)
C0099-6
Ignition (Y104)
Auxiliary (Y163)
C0099-9 G,4.0
C0099-2 PB,4.0
Generic Electronic Module (D162)
C0660-2
C0662-19 RY,2.5
C0660-19
Header (K109)
C0723-0
C0723-0 RY,0.75
C0723-0 RY,0.75
C0723-0 RY,0.75
C0723-0 RY,0.75
Lamp-Interior-Front (B100)
C0355-8
C0355-7
WN,0.35
Switch-Interior-lamp-Front (S304)
Switch-Map-lamp (S254)
Lamp-Map (B154)
6.0 Watts
C0355-6 N,0.75
X215
N,1.5
C0821-0
C0355-1
Lamp-Glove box (B109)
C0227-1
C0227-4 N,0.75
10.0 Watts
Lamp-Interior-Rear (B104)
C0357-8
C0357-7
C0357-1
RY,2.5
X18121
RY,0.75
Switch-Interior-lamp-Rear (S305)
C0357-6 N,0.75
C0555-0
SW,0.35
A Sheet2
B Sheet2
C Sheet2
D Sheet2
E Sheet3
AA Sheet2
BB Sheet2
F Sheet3
G Sheet3
H Sheet3
K Sheet3
L Sheet3
M Sheet3
N Sheet3

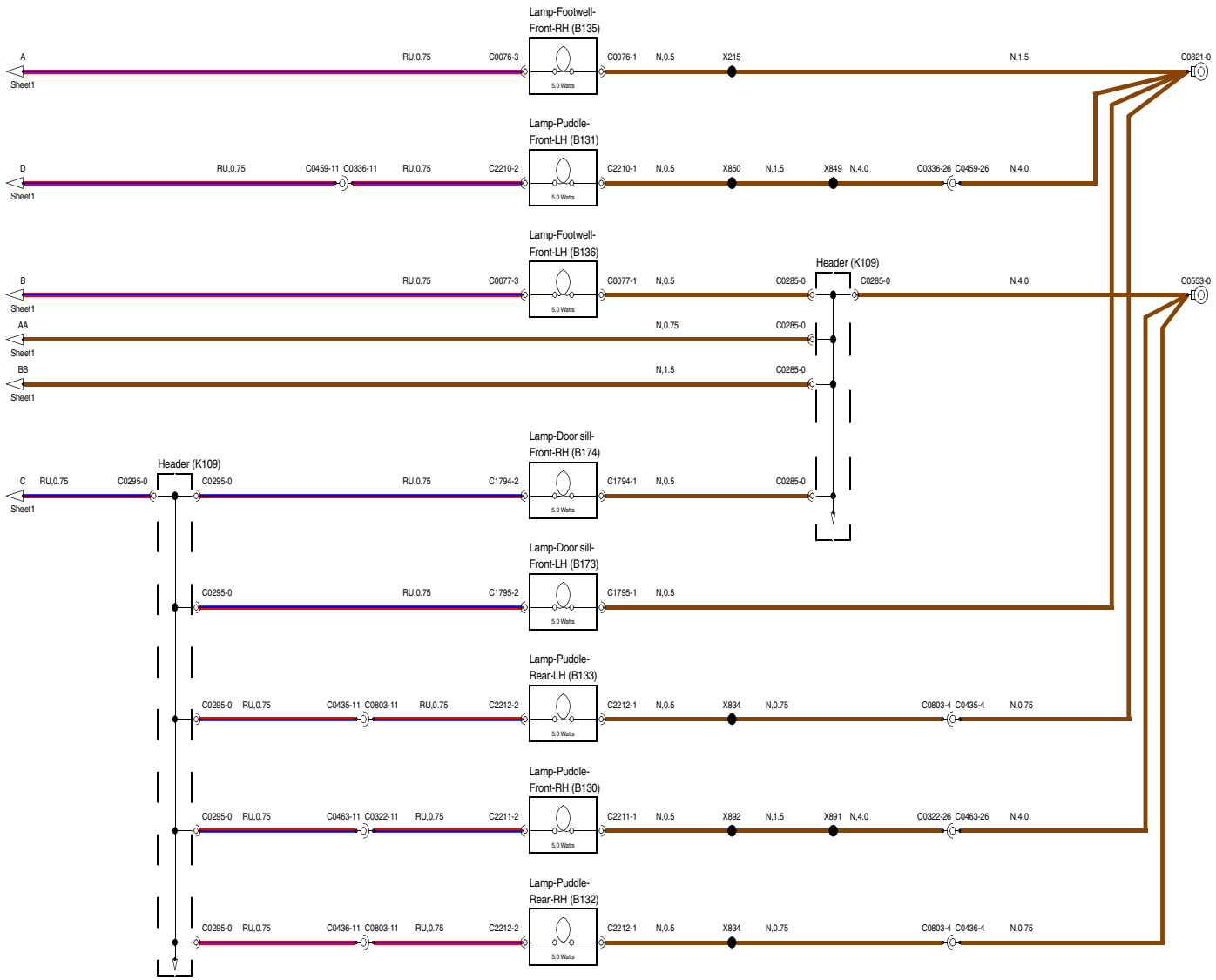
Lamp-Footwell-
Front-RH (B135)
A
Sheet1
RU,0.75
C0076-3
C0076-1
N,0.5
X215
N,1.5
C0821-0
5.0 Watts
Lamp-Puddle-
Front-LH (B131)
D
Sheet1
RU,0.75
C0459-11
C0336-11
RU,0.75
C2210-2
C2210-1
N,0.5
X850
N,1.5
X849
N,4.0
C0336-26
C0459-26
N,4.0
Lamp-Footwell-
Front-LH (B136)
Header (K109)
B
Sheet1
RU,0.75
C0077-3
C0077-1
N,0.5
C0285-0
C0285-0
N,4.0
C0553-0
AA
Sheet1
N,0.75
C0285-0
BB
Sheet1
N,1.5
C0285-0
Lamp-Door sill-
Front-RH (B174)
Header (K109)
C
Sheet1
RU,0.75
C0295-0
C0295-0
RU,0.75
C1794-2
C1794-1
N,0.5
C0285-0
Lamp-Door sill-
Front-LH (B173)
C0295-0
RU,0.75
C1795-2
C1795-1
N,0.5
Lamp-Puddle-
Rear-LH (B133)
C0295-0
RU,0.75
C0435-11
C0803-11
RU,0.75
C2212-2
C2212-1
N,0.5
X834
N,0.75
C0803-4
C0435-4
N,0.75
Lamp-Puddle-
Front-RH (B130)
C0295-0
RU,0.75
C0463-11
C0322-11
RU,0.75
C2211-2
C2211-1
N,0.5
X892
N,1.5
X891
N,4.0
C0322-26
C0463-26
N,4.0
Lamp-Puddle-
Rear-RH (B132)
C0295-0
RU,0.75
C0436-11
C0803-11
RU,0.75
C2212-2
C2212-1
N,0.5
X834
N,0.75
C0803-4
C0436-4
N,0.75

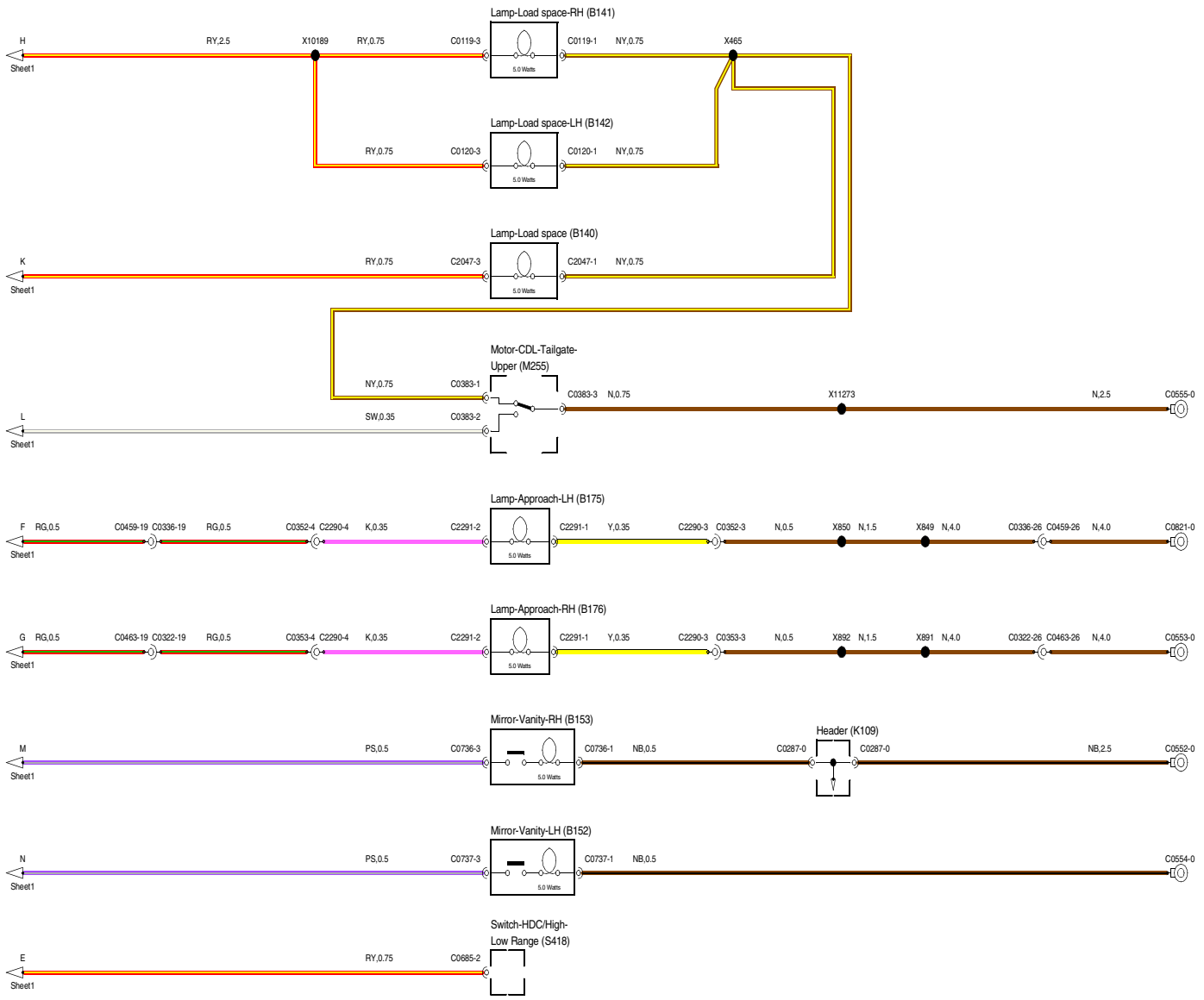
Lamp-Load space-RH (B141)
H
Sheet1
RY,2.5
X10189
RY,0.75
C0119-3
5.0 Watts
C0119-1
NY,0.75
X465
Lamp-Load space-LH (B142)
RY,0.75
C0120-3
5.0 Watts
C0120-1
NY,0.75
Lamp-Load space (B140)
K
Sheet1
RY,0.75
C2047-3
5.0 Watts
C2047-1
NY,0.75
Motor-CDL-Tailgate-
Upper (M255)
NY,0.75
C0383-1
C0383-3
N,0.75
X11273
N,2.5
C0555-0
L
Sheet1
SW,0.35
C0383-2
Lamp-Approach-LH (B175)
F
Sheet1
RG,0.5
C0459-19
C0336-19
RG,0.5
C0352-4
C2290-4
K,0.35
C2291-2
5.0 Watts
C2291-1
Y,0.35
C2290-3
C0352-3
N,0.5
X850
N,1.5
X849
N,4.0
C0336-26
C0459-26
N,4.0
C0821-0
Lamp-Approach-RH (B176)
G
Sheet1
RG,0.5
C0463-19
C0322-19
RG,0.5
C0353-4
C2290-4
K,0.35
C2291-2
5.0 Watts
C2291-1
Y,0.35
C2290-3
C0353-3
N,0.5
X892
N,1.5
X891
N,4.0
C0322-26
C0463-26
N,4.0
C0553-0
Mirror-Vanity-RH (B153)
M
Sheet1
PS,0.5
C0736-3
5.0 Watts
C0736-1
NB,0.5
Header (K109)
C0287-0
C0287-0
NB,2.5
C0552-0
Mirror-Vanity-LH (B152)
N
Sheet1
PS,0.5
C0737-3
5.0 Watts
C0737-1
NB,0.5
C0554-0
Switch-HDC/High-
Low Range (S418)
E
Sheet1
RY,0.75
C0685-2